DEVELOPMENT OF A PROTOTYPE SUPERCONDUCTING CW CAVITY AND CRYOMODULE FOR ENERGY RECOVERY

P. A. McIntosh, C. D. Beard, D. M. Dykes and B. Todd, CCLRC Daresbury Laboratory, Warrington, WA4 4AD, UK
S. Belomestnykh, M. Liepe, V. Medjidzade, H. Padamsee, J. Sears, V. D. Shemelin, Cornell University, Ithaca, NY, 14853, USA
D. Proch, DESY, Hamburg, Germany
A. Buechner, P. Michel, J. Teichert, FZR Rossendorf, Strahlungsquelle ELBE, PF 510119, D-01314 Dresden, Germany
T. Kimura, T. I. Smith, HEPL Stanford University, Stanford, CA, 94305, USA
J. Byrd, J. N. Corlett, D. Li, LBNL, Berkeley, CA 94720, USA

Abstract

Energy Recovery LINAC (ERL) and LINAC-driven FEL proposals and developments are now widespread around the world. Superconducting RF (SRF) cavity advances made over the last 10 years for TESLA/TTF at 1.3 GHz, in reliably achieving accelerating gradients >20 MV/m, suggest their suitability for these ERL and FEL accelerators. Typically however, photon fluxes are maximised from the associated insertion devices when the electron bunch repetition rate is as high as possible, making CW-mode operation at high average current a fundamental requirement for these light sources. Challenges arise in controlling the substantial HOM power and in minimizing the power dissipated at cryogenic temperatures during acceleration and energy recovery, requiring novel techniques to be employed. This paper details a collaborative development for an advanced high-Q_0 cavity and cryomodule system, based on a modified TESLA cavity, housed in a Stanford/Rossendorf cryomodule. The cavity incorporates a Cornell developed resistive-wall HOM damping scheme, capable of providing the improved level of HOM damping and reduced thermal load required.

Presented at the Tenth European Particle Accelerator Conference (EPAC06), Edinburgh, UK, 26-30 June, 2006

DEVELOPMENT OF A PROTOTYPE SUPERCONDUCTING CW CAVITY AND CRYOMODULE FOR ENERGY RECOVERY

P. A. McIntosh[#], C. D. Beard, D. M. Dykes and B. Todd, CCLRC Daresbury Laboratory, Warrington, WA4 4AD, UK
S. Belomestnykh, M. Liepe, V. Medjidzade, H. Padamsee, J. Sears, V. D. Shemelin, Cornell University, Ithaca, NY, 14853, USA
D. Proch, DESY, Hamburg, Germany
A. Buechner, P. Michel, J. Teichert, FZR Rossendorf, Strahlungsquelle ELBE, PF 510119, D-01314 Dresden, Germany
T. Kimura, T. I. Smith, HEPL Stanford University, Stanford, CA, 94305, USA
J. Byrd, J. N. Corlett, D. Li, LBNL, Berkeley, CA 94720, USA

Abstract

Energy Recovery LINAC (ERL) and LINAC-driven FEL proposals and developments are now widespread around the world. Superconducting RF (SRF) cavity advances made over the last 10 years for TESLA/TTF at 1.3 GHz, in reliably achieving accelerating gradients >20 MV/m, suggest their suitability for these ERL and FEL accelerators. Typically however, photon fluxes are maximised from the associated insertion devices when the electron bunch repetition rate is as high as possible, making CW-mode operation at high average current a fundamental requirement for these light sources. Challenges arise in controlling the substantial HOM power and in minimizing the power dissipated at cryogenic temperatures during acceleration and energy recovery, requiring novel techniques to be employed. This paper details a collaborative development for an advanced high-Q_0 cavity and cryomodule system, based on a modified TESLA cavity, housed in a Stanford/Rossendorf cryomodule. The cavity incorporates a Cornell developed resistive-wall HOM damping scheme, capable of providing the improved level of HOM damping and reduced thermal load required.

INTRODUCTION

The Energy Recovery Linac Prototype (ERLP) facility at Daresbury Laboratory [1] and the high current ERL injector at Cornell University [2] will allow for the development of various cutting-edge systems which are particularly important to ERL applications, and also relevant to singe-pass FEL configurations. One such area for investigation is for the design of a generic cavity/cryomodule system which is capable of delivering the required CW RF power, whilst also being able to cope with the induced HOMs and provide stable acceleration by minimising its microphonics sensitivity. The fundamental goals for this collaboration are:

- To test the cryomodule (equipped with two 7-cell cavities) at 15 - 20 MV/m at $Q_o > 1 \times 10^{10}$ at 1.8 K.
- Investigate cryomodule operation at high values of Q_e to assess microphonics noise limitations.
- Beam test the cryomodule at ERLP at 1 mA beam current in a recirculation loop.
- Beam test the cryomodule at Cornell at 1 - 100 mA after the ERL injector.

p.a.mcintosh@dl.ac.uk

COLLABORATIVE DEVELOPMENT

The collaborative nature of this development is clearly evident even at this early stage, whereby Stanford University have provided a cryomodule which has an identical layout to that of the modules available on ERLP, such that the completed module can be incorporated onto ERLP and its associated support services. Cornell University will provide the HOM absorber design to be incorporated into the cryomodule and DESY will provide 7-cell TESLA/TTF cavities [3] (previously used for the superstructure) that will be modified by Cornell and integrated by Daresbury. LBNL, FZR Rossendorf and Daresbury are providing engineering resources to facilitate the integration process, in particular with regards to the mechanical and RF optimisation. This will include opening up the beam pipe diameter to conduct all HOMs out to the ferrite beam pipe loads.

The generic nature and hence the defining characteristics of this cavity development can be gleaned from the typical operating parameters of existing and proposed ERL facilities, a selection of which are shown in Table 1.

Table 1: Example ERL RF Cavity Characteristics

Accelerator	ERLP	4GLS	Cornell ERL	TJNAF ERL	JAERI ERL	BNL ERL
Avg Current (mA)	0.013	100	100	9.1	5.2	500
Frequency (GHz)	1.3	1.3	1.3	1.5	0.5	0.703
Eacc (MV/m)	13.5	15.2	16	20	7.5	13
Power/Cavity (kW)	4	10	8	2.5	50	50

OPERATING PARAMETERS

Operating at 1.3 GHz for these ERL applications, shows that CW gradients of up to 20 MV/m are envisaged, which approaches the original required specifications for TESLA and XFEL (albeit in pulsed

mode for these applications). High refrigeration capital and operating costs also push the gradients to lower values.

The optimum external Q_e for these cavities is dependent upon a number of factors; for ERL accelerators - as the effects of beam loading cancel in the accelerating and decelerating phases, then the chosen gradient and peak microphonics cavity detuning ($\Delta\varpi$) become the driving mechanisms for defining the optimum cavity coupling and corresponding generator power (P_g):

$$P_g = \frac{V_{acc}^2}{4\frac{R}{Q}Q_e}\left\{1+\left(\frac{2\Delta\varpi Q_e}{\varpi_c}\right)^2\right\} \qquad (1)$$

Fig. 1 shows how the magnitude of the microphonics impacts heavily upon the required RF operating budget. Having flexibility in adjustment of Q_e is clearly advantageous when trying to minimise the RF power needed when a number of cavities are operated, each with their own microphonic sensitivities.

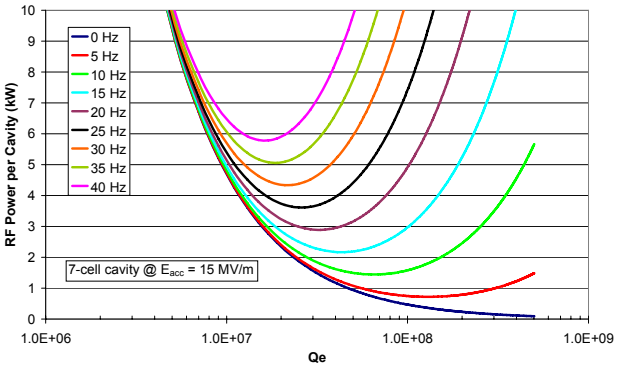

Figure 1: Microphonics Impact on Q_e and RF Power.

From Fig. 1 it is clear that the higher Q_e that can be tolerated, the lower the RF power needed per cavity. Experiments at the JLab ERL, using the Cornell developed digital LLRF system, has shown phase and amplitude stability of 0.02° and 10^{-4} respectively, with a Q_e = 1.2 x 10^8 at 5 mA in energy recovery mode [4]. Having an input coupler that can intrinsically adjust from $Q_e = 10^7$ to 10^8 has the benefit of being able to cope with a large range of microphonics (up to 40 Hz), whilst maintaining a modest RF power requirement of < 10 kW. Active microphonics compensation with piezo tuning will be required to ensure adequate RF stability control.

HOM ABSORBERS

Strong damping of the beam-induced HOMs is essential to preserve beam emittance, minimize impedance driving the BBU instability, and to reduce the total HOM losses. Loaded quality factors (Q_L) of between a few 100 and a few 1000 are therefore required. To achieve this demanding goal, RF absorbing material will be placed in the beam tube between (and at the ends of) each cavity in the linac module. Cornell has developed such a device (see Fig. 2) for their ERL injector module [5], which becomes an attractive solution for this application. The operating temperature of the HOM absorbers will be below 80 K and a combination of three different RF absorbing materials provide efficient RF absorption from 1.4 GHz up to 50 GHz.

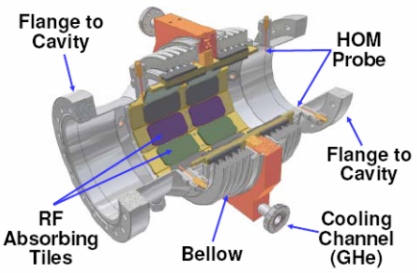

Figure 2: Cornell ERL Injector HOM Absorber.

INPUT COUPLER OPTIONS

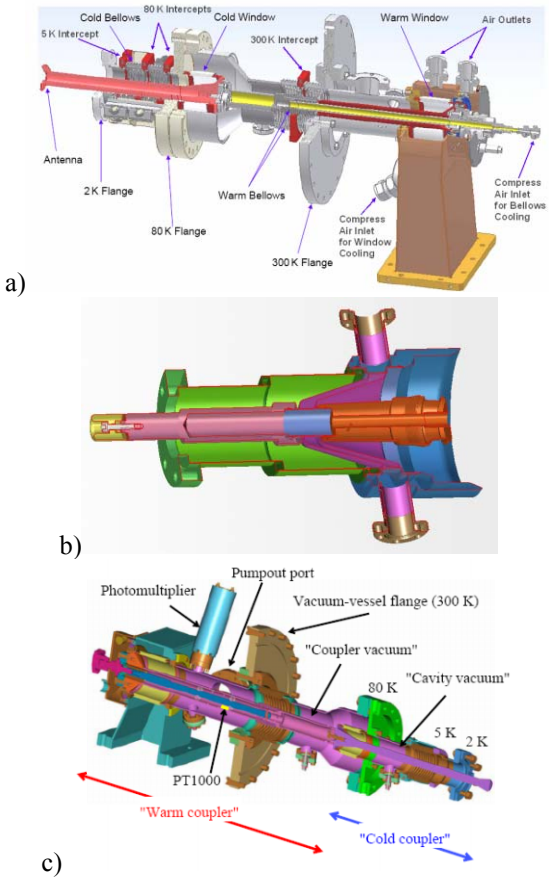

Figure 3: a) Cornell ERL Injector, b) Stanford/Rossendorf and c) TTF III Input Couplers.

Three different input coupler types are currently being investigated as suitable solutions for this cavity development. The first being the Cornell ERL injector input coupler (see Fig. 3a), which provides 16 mm of antenna adjustment and a power delivery capability of 75 kW in CW travelling wave [6].

The Stanford/Rossendorf input coupler, although not adjustable, has proven to be capable of delivering up to 10 kW CW standing wave [7] (see Fig. 3b). Since this coupler is fixed, it is only a viable solution providing the

external three stub tuner achieves the appropriate Q_e adjustment.

High power testing of the adjustable TTF III input coupler (see Fig. 3c) has predicted a CW power capability of 10 kW in travelling wave and 5 kW in standing wave [8].

TUNER OPTIONS

The mechanical evaluations performed thus far have not defined the type of tuner to be employed, as it has not yet been fully realised what the space limitations are within the cryomodule envelope. The two viable tuner solutions are detailed below. Many of the common tuner designs are based on the original Saclay tuner [9] which is a mechanical arm positioned on one end of the cavity. The latest development of this type of tuner for TTF improves its compact nature and also includes piezo actuators (see Fig. 4a).

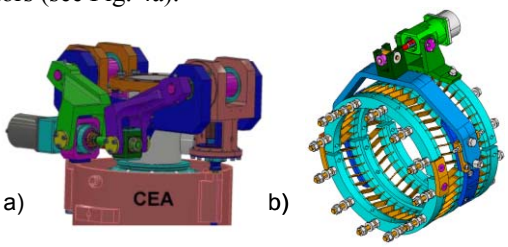

Figure 4: a) Lever-type and b) Blade Tuner Mechanisms.

An alternative to the lever type is the Blade-type tuner [10] developed for the TESLA/TTF superstructure module (see Fig. 4b) and is composed of two constituent parts; the movement leverage and the bending rings. The blade leverage system provides amplification of the torque of the stepper motor, considerably reducing the total movement (reducing the required space) and increasing the tuning sensitivity compared to the lever-type. For the Blade type tuner, the stepper motor is rigidly connected to the helium vessel and produces a rotation of the arm in the centre of the tuner. The movement of the arm induces the rotation of the bending system that changes the cavity length.

CAVITY SOLUTION EVALUATION

The fundamental challenge facing this collaboration has been to confirm that the three Cornell HOM absorbers could physically fit inside the Stanford cryomodule, whilst interfacing with the two 7-cell cavities, such that the input couplers could exit via the existing cryomodule apertures. Fig. 5a shows the original Stanford cryomodule with its two 9-cell cavities and central input couplers.

Two different HOM absorber geometries are employed; the first being 267 mm long and 78 mm diameter which is located between the two cavities, the second being 308 mm long and 106 mm diameter which are located at both ends of the cryomodule. By careful adjustment of the terminating flanges of each cavity, the input coupler interfaces could be positioned to match the existing aperture in the Stanford cryomodule (see Fig. 5b).

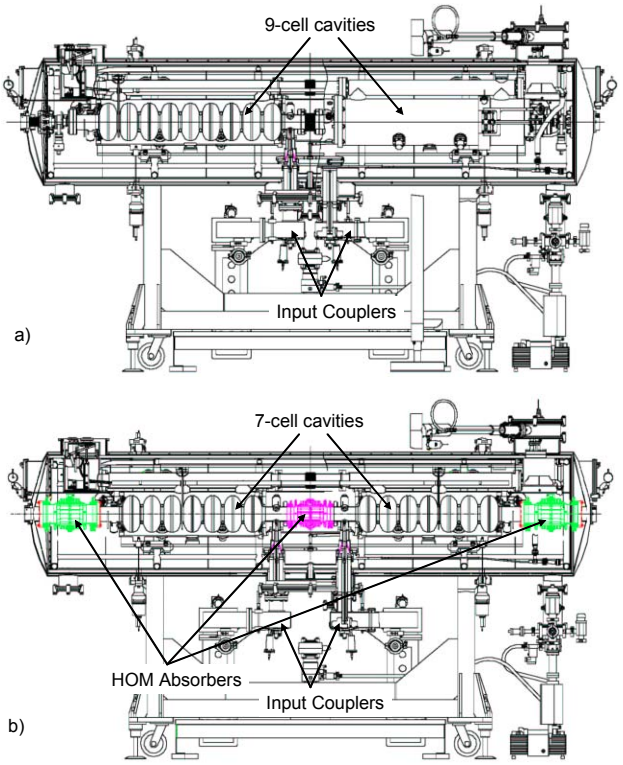

Figure 5. a)Original and b)Modified Cavity/Cryomodule.

OUTLOOK AND SUMMARY

This cavity and cryomodule development, although in its infancy, has identified appropriate mechanisms for achieving the required gradient, HOM damping, input coupling and cavity tuning to facilitate its ERL application up to 100 mA. Further development and integration of these various components will take place over the next 12 – 18 months, with possible first beam tests on ERLP occurring in early 2008.

REFERENCES

[1] M.W. Poole *et al*, "4GLS and the Energy Recovery Linac Prototype Project at Daresbury Laboratory", PAC'05, Knoxville, USA, 2005, pp. 431-433.

[2] M Tigner *et al*, "Phase 1 Energy Recovery Linac at Cornell University", EPAC02, Paris, 2002, pp 644-646.

[3] J. Sekutowicz *et al*, "Superconducting Superstructure for the TESLA Collider", EPAC98, Stockholm, 1998, pp. 1876-1878.

[4] M. Liepe *et al*., "Pushing the Limits: RF Field Control at High Loaded Q", PAC05, Knoxville, 2005, pp. 2642-2644.

[5] V. Shemelin *et al*, "Status of HOM Load for the Cornell ERL Injector", these proceedings.

[6] V. Medjidzade *et al*, "Design of the CW Cornell ERL Injector Cryomodule", PAC05, Knoxville, 2005, pp. 4290-4292.

[7] Private discussion with A. Buechner, FZR Rossendorf.

[8] J. Knobloch *et al*, "CW Operation of the TTF-III Input Coupler", PAC05, Knoxville, 2005, pp 3292-3294.

[9] "TESLA Test Facility Linac – Design Report", TESLA-Collaboration, DESY, March 1995, TESLA 95-01.

[10] D. Barni *et al*, "A New Tuner for TESLA", EPAC02, Paris, 2002, pp 2205-2207.